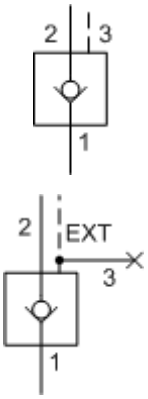

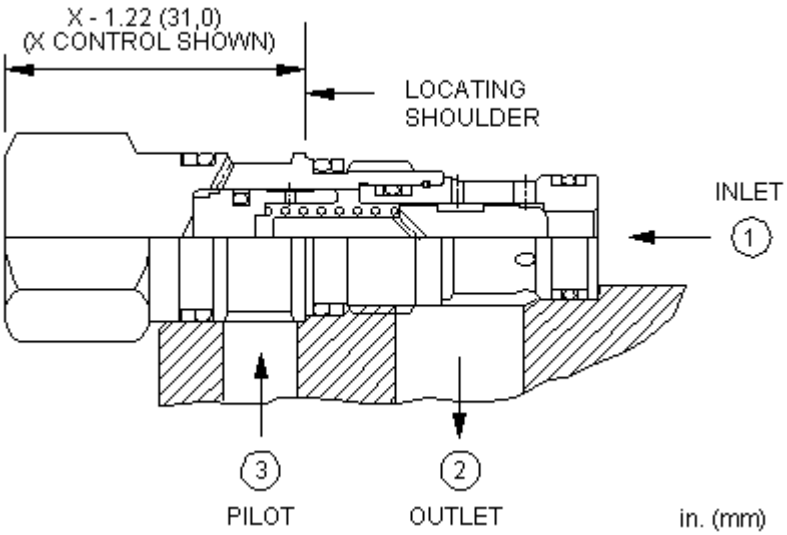

3 1 1 2 3 1 1

TECHNICAL DATA

NOTE: DATA MAY VARY BY CONFIGURATION. SEE CONFIGURATION SECTION.

	350 bar
	3:1
110 SUS (24 cSt)	0,07 cc/min.
Seal kit - Cartridge	Buna: 990-163-007
Seal kit - Cartridge	EPDM: 990-163-014
Seal kit - Cartridge	Polyurethane: 990-163-002
Seal kit - Cartridge	Viton: 990-163-006

CONFIGURATION OPTIONS

Model Code Example: COBAXCNV

(X)	(C)		(V)		MATERIAL/COATING	
X	**C**	30 psi (2 bar)	**V**		Standard Material/Coating	
	D	50 psi (3,5 bar)	**E**	EPDM	**/AP**	
	E	75 psi (5 bar)	**N**		**/LH**	-
	F	100 psi (7 bar)				

©2024 Sun Hydraulics