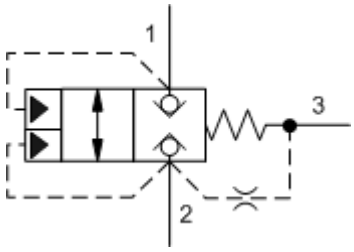

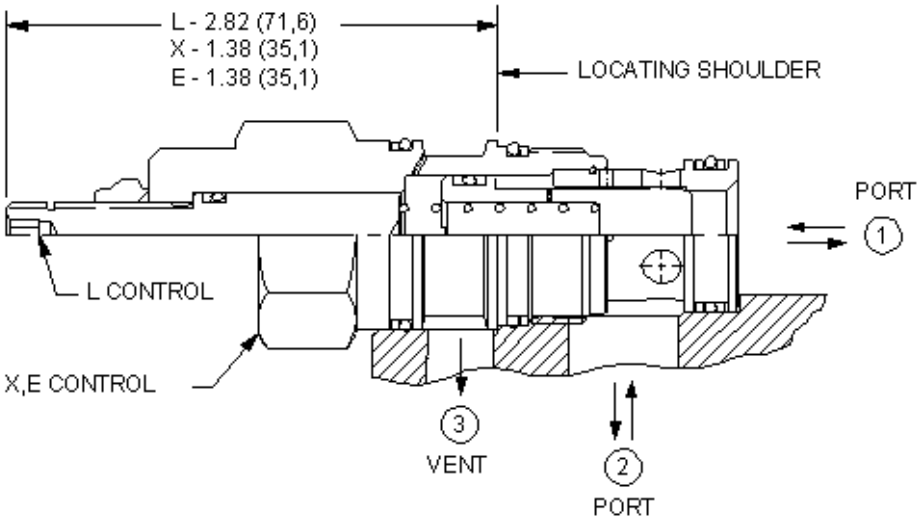

CONFIGURATION

X

2 2 3 2 1 1 2

TECHNICAL DATA

	350 bar
110 SUS (24 cSt)	0,7 cc/min.
A3 A1	1.8:1
A3 A2	2.25:1
	0,53 mm
Seal kit - Cartridge	Buna: 990-202-007
Seal kit - Cartridge	Polyurethane: 990-002-002
Seal kit - Cartridge	Viton: 990-202-006

CONFIGURATION OPTIONS

Model Code Example: LOFBXN

(X)	(D)	(V)
X	D 50 psi (3,5 bar)	V
		N

©2024 Sun Hydraulics