, , 2

760 L/min. / CAVITY: T-19A

sunhydraulics.com/model/LOJB

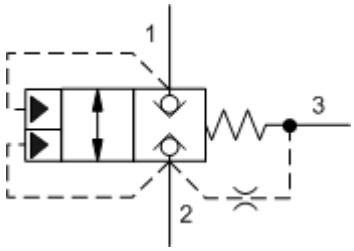

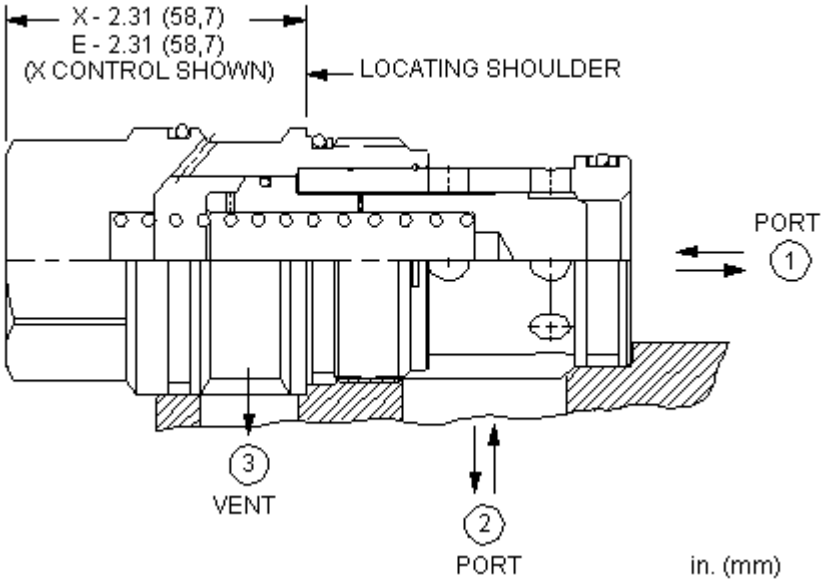

2 2 3 2 1 1 2

TECHNICAL DATA

NOTE: DATA MAY VARY BY CONFIGURATION. SEE CONFIGURATION SECTION.

	350 bar
110 SUS (24 cSt)	0,7 cc/min.
A3 A1	1.8:1
A3 A2	2.25:1
	0,9 mm
Seal kit - Cartridge	Buna: 990-019-007
Seal kit - Cartridge	Polyurethane: 990-019-002
Seal kit - Cartridge	Viton: 990-019-006
Seal kit - Cartridge	Buna: 990-019-007
Seal kit - Cartridge	Polyurethane: 990-019-002
Seal kit - Cartridge	Viton: 990-019-006

CONFIGURATION OPTIONS

Model Code Example: LOJBXN

(X)	(N)	MATERIAL/COATING
X	N	Standard Material/Coating
	V	/AP

©2024 Sun Hydraulics