, , 2

760 L/min. / CAVITY: T-19A

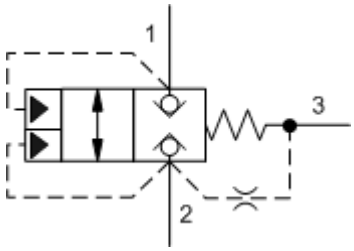

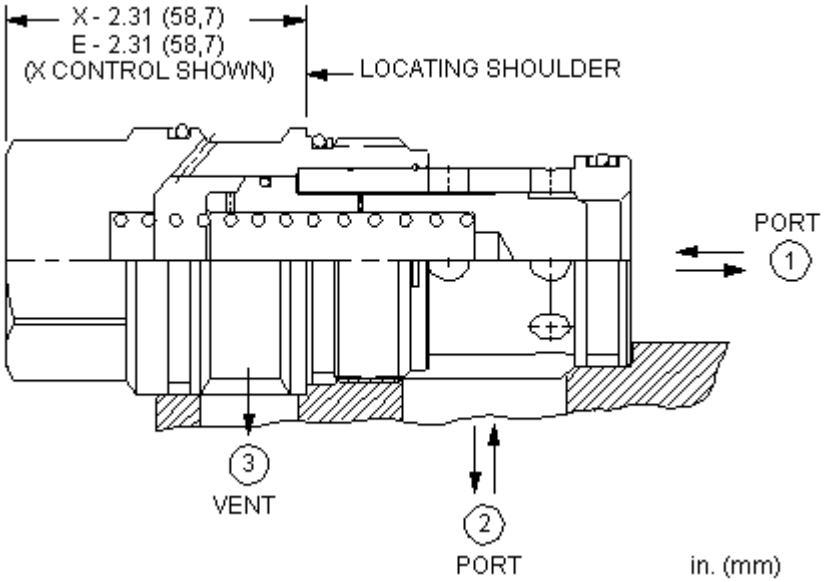

CONFIGURATION

X

Material/Coating

2 2 3 2 1 1 2

TECHNICAL DATA

	350 bar
110 SUS (24 cSt)	0,7 cc/min.
A3 A1	1.8:1
A3 A2	2.25:1
	0,9 mm
Seal kit - Cartridge	Buna: 990-019-007
Seal kit - Cartridge	Polyurethane: 990-019-002
Seal kit - Cartridge	Viton: 990-019-006

CONFIGURATION OPTIONS

(X)

X

(D)

D 50 psi (3,5 bar)

Model Code Example: LOJBXN

(V)

V

N

MATERIAL/COATING

Standard Material/Coating

/AP

©2024 Sun Hydraulics