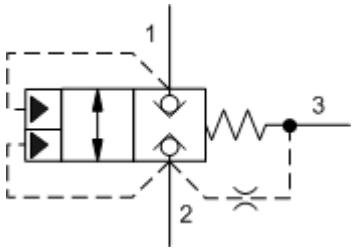

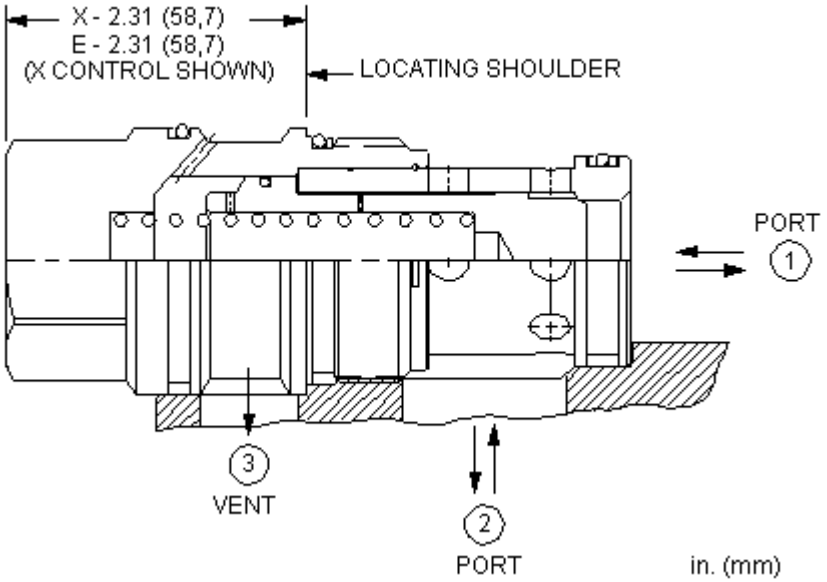

CONFIGURATION

X _____

_____

_____

Material/Coating

2 2 3 2 1 1 2

TECHNICAL DATA

NOTE: DATA MAY VARY BY CONFIGURATION. SEE CONFIGURATION SECTION.

	T-19A
	4
	760 L/min.
	350 bar
	6,9 cc
110 SUS (24 cSt)	0,7 cc/min.
A3 A1	1.8:1
A3 A2	2.25:1
	0,9 mm
	41,3 mm
	474 - 508 Nm
Seal kit - Cartridge	Buna: 990-019-007
Seal kit - Cartridge	Polyurethane: 990-019-002
Seal kit - Cartridge	Viton: 990-019-006

©2024 Sun Hydraulics

OPTION SELECTION EXAMPLE: LOJBXN

(X)	(D)	(V)	MATERIAL/COATING
X	D 50 psi (3,5 bar)	V	Standard Material/Coating
		N	/AP

TECHNICAL FEATURES

-
- 1 =100% 2 =80% =180%
-
- 5000 psi (350 bar)
- /AP 316
- Sun /

PERFORMANCE CURVES

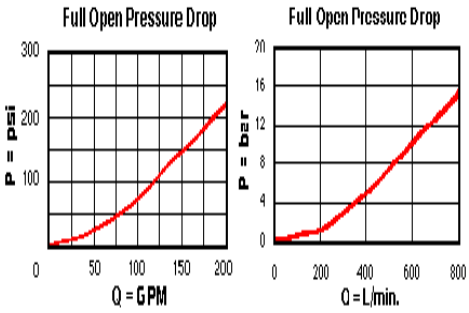

©2024 Sun Hydraulics