CONFIGURATION

Modifier

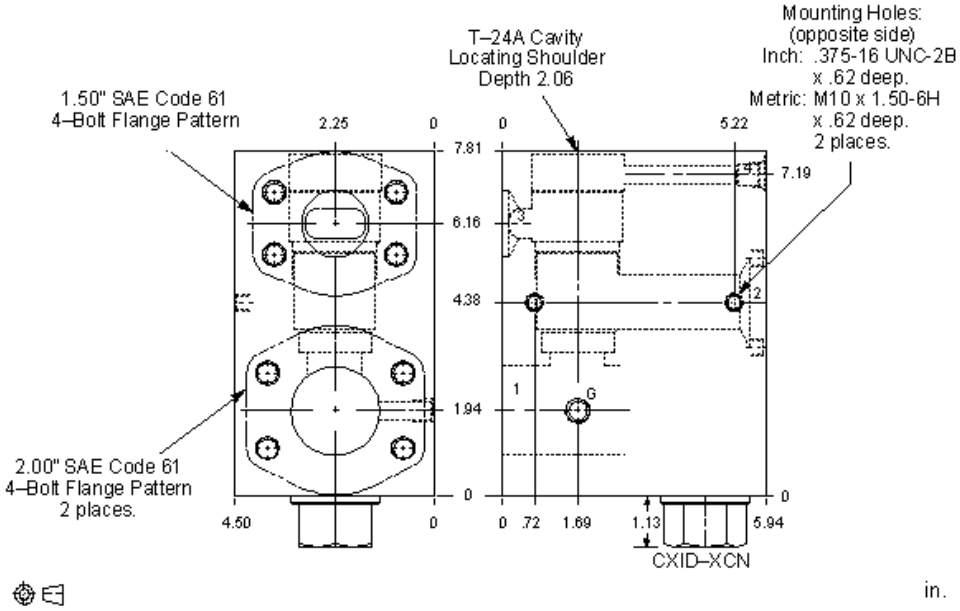

NOTES: • ***Important:*** Carefully consider the maximum system pressure. The pressure rating of the manifold is dependent on the manifold material, with the port type/size a secondary consideration. Manifolds constructed of aluminum are not rated for pressures higher than 3000 psi (210 bar), regardless of the port type/size specified.

MODIFIER	(/Y)
/Y	65-45-12 Ductile Iron, Viton, Dewatering Oil
	6061-T651 Aluminum, Buna-N
/11	6061-T651 Aluminum, Buna-N, Clear Anodize - Per MIL SPEC 8625F Type II, Class I
/10	6061-T651 Aluminum, Buna-N, Black Anodize - Per MIL SPEC 8625F Type II, Class II
/V	6061-T651 Aluminum, Viton
/16	6061-T651 Aluminum, Viton, Clear Anodize - Per MIL SPEC 8625F Type II, Class I
/15	6061-T651 Aluminum, Viton, Black Anodize - Per MIL SPEC 8625F Type II, Class II
/M	6061-T651 Aluminum, Metric, Buna-N
/1B	6061-T651 Aluminum, Metric, Buna-N, Clear Anodize - Per MIL SPEC 8625F Type II, Class I
/1A	6061-T651 Aluminum, Metric, Buna-N, Black Anodize - Per MIL SPEC 8625F Type II, Class II
/Z	6061-T651 Aluminum, Metric, Viton
/1G	6061-T651 Aluminum, Metric, Viton, Clear Anodize - Per MIL SPEC 8625F Type II, Class I
/1F	6061-T651 Aluminum, Metric, Viton, Black Anodize - Per MIL SPEC 8625F Type II, Class II
/S	65-45-12 Ductile Iron, Buna-N, Dewatering Oil
/S4	65-45-12 Ductile Iron, Buna-N, Chem. Black
/S3	65-45-12 Ductile Iron, Buna-N, Trivalent Clear Zinc with Top Sealer
/Y4	65-45-12 Ductile Iron, Viton, Chem. Black
/Y3	65-45-12 Ductile Iron, Viton, Trivalent Clear Zinc with Top Sealer
/T	65-45-12 Ductile Iron, Metric, Buna-N, Dewatering Oil
/T4	65-45-12 Ductile Iron, Metric, Buna-N, Chem. Black
/T3	65-45-12 Ductile Iron, Metric, Buna-N, Trivalent Clear Zinc with Top Sealer
/W	65-45-12 Ductile Iron, Metric, Viton, Dewatering Oil
/W4	65-45-12 Ductile Iron, Metric, Viton, Chem. Black
/W3	65-45-12 Ductile Iron, Metric, Viton, Trivalent Clear Zinc with Top Sealer

©2024 Sun Hydraulics