CONFIGURATION

Modifier

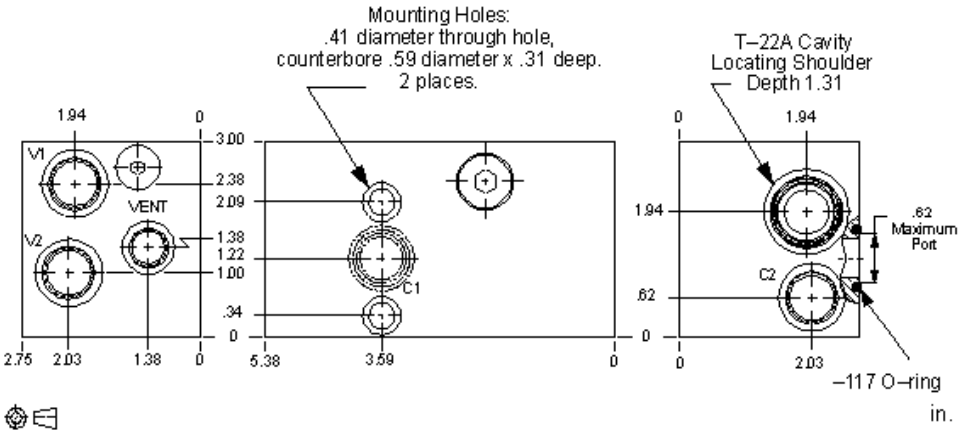

NOTES:

- ***Important:*** Carefully consider the maximum system pressure. The pressure rating of the manifold is dependent on the manifold material, with the port type/size a secondary consideration. Manifolds constructed of aluminum are not rated for pressures higher than 3000 psi (210 bar), regardless of the port type/size specified.

MODIFIER		(/Y3)
/Y3	65-45-12 Ductile Iron, Viton, Trivalent Clear Zinc with Top Sealer	
	6061-T651 Aluminum, Buna-N	
/11	6061-T651 Aluminum, Buna-N, Clear Anodize - Per MIL SPEC 8625F Type II, Class I	
/10	6061-T651 Aluminum, Buna-N, Black Anodize - Per MIL SPEC 8625F Type II, Class II	
/V	6061-T651 Aluminum, Viton	
/16	6061-T651 Aluminum, Viton, Clear Anodize - Per MIL SPEC 8625F Type II, Class I	
/15	6061-T651 Aluminum, Viton, Black Anodize - Per MIL SPEC 8625F Type II, Class II	
/S	65-45-12 Ductile Iron, Buna-N, Dewatering Oil	
/S4	65-45-12 Ductile Iron, Buna-N, Chem. Black	
/S3	65-45-12 Ductile Iron, Buna-N, Trivalent Clear Zinc with Top Sealer	
/Y	65-45-12 Ductile Iron, Viton, Dewatering Oil	
/Y4	65-45-12 Ductile Iron, Viton, Chem. Black	

©2024 Sun Hydraulics